DESIGNED & ASSEMBLED IN DENMARK

Hero Camper

Ready for new adventures

HeroCamper

HeroCamper

Seeking Adventures

Pull the plug from the busy everyday life and go on an off-grid adventure with the Hero Camper. Seize the opportunity to explore unknown places.

HERO CAMPER - STANDARD EQUIPMENT

- Stainless steel kitchen countertop with integrated sink and faucet
- Compressor cooling box, 22 L, 12V/230V
- LED lights in the kitchen
- Freshwater tank, 30L
- Soft-touch control panel with battery and water indicator
- Converter: IDDX 12V 30Ah DC/DC with built-in MPPT
- Charges from car
- Patented HeroCamper LED taillights
- 125W mounted/integrated flexible solar panel
- Sockets: 5 x 230V, 2 x 5V USB, 2 x 12V
- Dimmable LED lights
- Bluetooth soundbar
- Extra stand for front chassis
- Front mounted gas-/dry storage box 57.5 L
- Off road axle with shock absorber protection
- Mounted 17" Ranger spare wheel
- 17" Ranger alloy rims with off road tires
- Aluminum diamond off road fender

AVAILABLE IN 3 PACKAGES

LIVINGSTONE

- Lithium battery 12V 30AH
- Thule 260 cm awning

Color options: Light Grey

COLUMBUS

- Lithium battery 12V 30AH
- Thule 300 cm awning
- Thule side and front screen
- Hero privacy curtain
- Hero kitchen tent

Color options: Light Grey, Dark Grey, Hunter Green

ARMSTRONG

- Power package containing 12V 100Ah battery & 12V40A charger
- Thule 300 cm awning
- Thule side and front screen
- Hero privacy curtain
- Hero kitchen tent
- Diesel air heater incl. control display
- Fender box set
- Smart bunk

Color options: Light Grey, Dark Grey, Hunter Green

HERO CAMPER SPECIFICATIONS

Height	232 cm
Length	478 cm
Width	230 cm
Net weight from	827 kg
Total weight	900 – 1,200 kg
Upgrade weight to 1,300 kg	Optional
Tires	265/65 R17 off road
Fresh Water tank	30L
Roof window	Included
Fully lockable	Yes
Power	5V/12V/230V (for 230V landline required)
Roof rack	Included
Heating	Optional
Solar	Included
Battery capacity	30 Ah Lithium

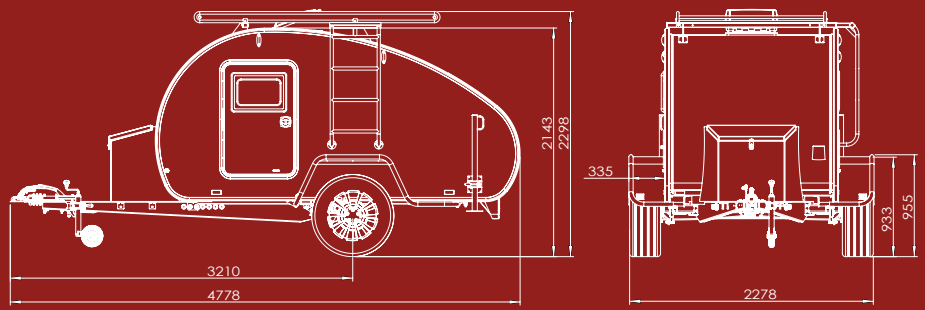

HEROCAMPER.COM

HERO ADD-ONS

SPACIOUSNESS
Hero Skybox Galileo
Smart Bunk
Fenderboxes

HEAT OPTIONS
230/1500W Electrical Heater w/Bluetooth
Diesel Heater
Portable Air Conditioner

POWER SOLUTIONS
Battery packages 100Ah - 200Ah
Inverter packages 1500W - 2000W
Portable solar panels 120W - 240W

COMFORT
Gas hob, portable
Gas hob, integrated
Waterport high pressure shower tank 30L
Mattress Deluxe
Mattress pad Deluxe

FOLLOW US

YOUR LOCAL DEALER